NOTES: 1.HUOSING: HIGH-TEMP THERMOPLASTIC UL94V-0 COLOR:BEIGE
2.ACTUATOR: HIGH-TEMP THERMOPLASTIC UL94V-0 COLOR:BLACK
3.TERMINAL:PHOSPHOR BRONZE
PLATING:1μ"GOLD FLASH OR 100~150μ"TIN(LEAD FREE)
OVERALL 50~100μ"NICKEL UNDER PLATED.
4.FITTING NAIL:BRASS
PLATING:100~150μ"TIN(LEAD FREE)
OVERALL 50~100μ"NICKEL UNDER PLATED.
5.CODING INFORMATION: EW527-Xxx-00x

- PACKING: E: TUBE; R: CARRIER REEL
- STANDARD TYPE
- PIN
- PLATING: G:GOLD FLASH; L:TIN(LEAD FREE); M:MATTE-TIN(LEAD FREE)
- 0.5 ZIF FPC SMT TOP CONTACT FPC CONNECTOR SERIES

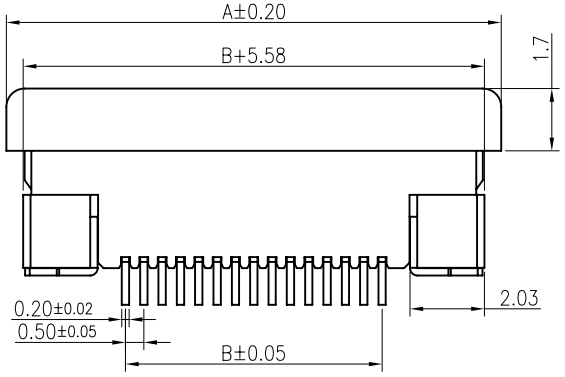

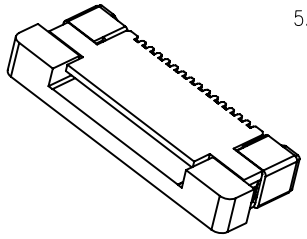

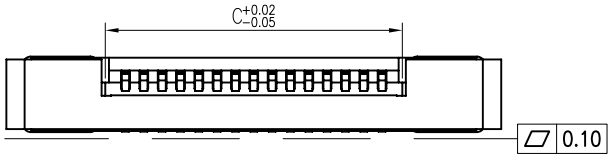

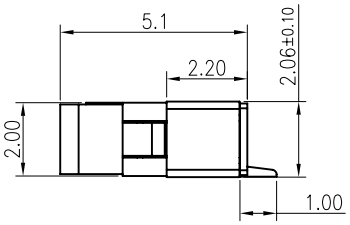

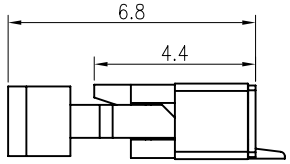

(ACTUATOR OPEN)

No. of contacts	Dimensions A	B	C	No. of contacts	Dimensions A	B	C
4	8.00	1.50	2.60	33	22.50	16.00	17.10
5	8.50	2.00	3.10	34	23.00	16.50	17.60
6	9.00	2.50	3.60	35	23.50	17.00	18.10
7	9.50	3.00	4.10	36	24.00	17.50	18.60
8	10.00	3.50	4.60	37	24.50	18.00	19.10
9	10.50	4.00	5.10	38	25.00	18.50	19.60
10	11.00	4.50	5.60	39	25.50	19.00	20.10
11	11.50	5.00	6.10	40	26.00	19.50	20.60
12	12.00	5.50	6.60	41	26.50	20.00	21.10
13	12.50	6.00	7.10	42	27.00	20.50	21.60
14	13.00	6.50	7.60	43	27.50	21.00	22.10
15	13.50	7.00	8.10	44	28.00	21.50	22.60
16	14.00	7.50	8.60	45	28.50	22.00	23.10
17	14.50	8.00	9.10	46	29.00	22.50	23.60
18	15.00	8.50	9.60	47	29.50	23.00	24.10
19	15.50	9.00	10.10	48	30.00	23.50	24.60
20	16.00	9.50	10.60	49	30.50	24.00	25.10
21	16.50	10.00	11.10	50	31.00	24.50	25.60
22	17.00	10.50	11.60	51	31.50	25.00	26.10
23	17.50	11.00	12.10	52	32.00	25.50	26.60
24	18.00	11.50	12.60	53	32.50	26.00	27.10
25	18.50	12.00	13.10	54	33.00	26.50	27.60
26	19.00	12.50	13.60	55	33.50	27.00	28.10
27	19.50	13.00	14.10	56	34.00	27.50	28.60
28	20.00	13.50	14.60	57	34.50	28.00	29.10
29	20.50	14.00	15.10	58	35.00	28.50	29.60
30	21.00	14.50	15.60	59	35.50	29.00	30.10
31	21.50	15.00	16.10	60	36.00	29.50	30.60
32	22.00	15.50	16.60	61	36.50	30.00	31.10

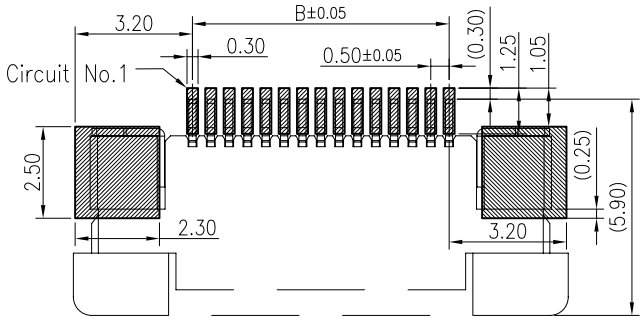

RECOMMENDED PCB PATTERN DIM.

TOLERANCE : ±0.05

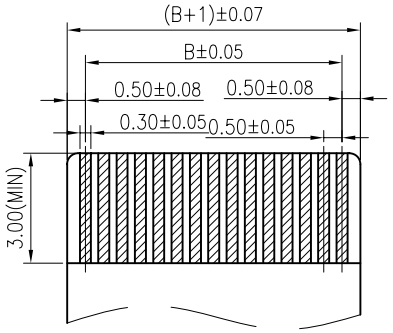

APPLICABLE F.F.C DIMENSION (REF.)

THICKNESS 0.30±0.03

一沃电子实业有限公司
TEL:+86-755-36887540
FAX:+86-755-36887541
http://www.ewconn.com

SER	REVISIONS	CHK	DATE

CUSTOMER

EWCONNECTOR
E-World Electronic Industry Ltd

REV:	SIZE:
A	A4
UNIT:	SCALE:
mm	5:1
SHEET NO:	
1 OF 1	

GENERAL TOLERANCE UNLESS OTHERWISE SPECIFIED
X.X ±0.20
X.XX ±0.15
X.XXX
ANG. 1°

PART NO: EW527 -Xxx-00R

TITLE: 0.5mm ZIF FPC CONN. SMT R/A TOP CONTACT

DRAWN BY: Kavin 2010-08-13
CHECKED BY:
APPROVED BY: